ENVASES SANZ BELDA, S.L.

Technical comercial data ref.

M.N-3.5 T.E-4

Serie MASTER NOVA

CAPO011604 30-11-22

TECHNICAL DATA:

Material: Polypropylene copolymer of first quality, suitable for contact with food according to current regulations.

Colours: White standard. Consult for other colours.

Useful Volume: 3.5 litres
Volume to the edge: 4.2 litres

Weight of the bucket: 154 g. approx.
Weight of the lid: 53 g. approx.
Weight of the handle (plastic): 8 g. approx.
Total Weight: 213 g. approx.

Decorative surface flat inks: 110 x 555 mm (height x perimeter)
Design surface photographic finish: 123 x 570 mm (height x perimeter)

MEASUREMENTS:

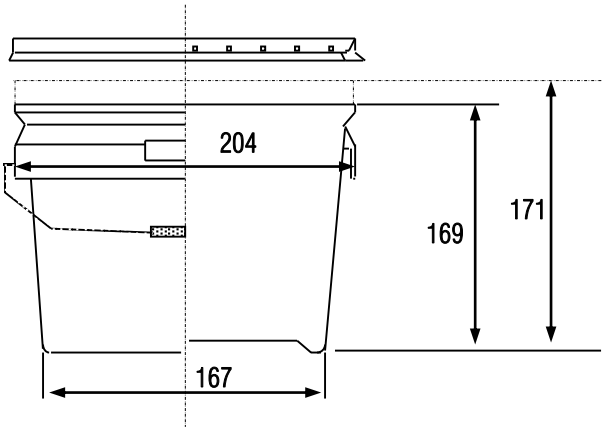

Measurements in millimetres

GROUPING OF TRASPORT:

Buckets: 1020 buckets per pallet
Pallet dimensions: 1250 x 1025 x 1070 (see drawing)

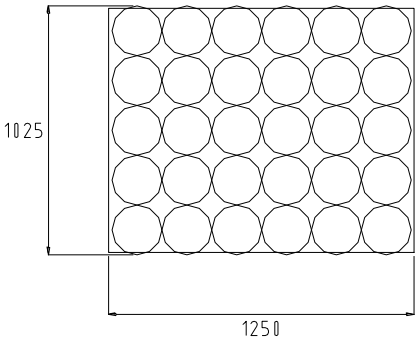

Lids: 204 lids per box, this serves as a packaging of transportation
Box dimensions: 420 x 220 x 1000

ENVASES SANZ BELDA , S.L. - Polígono San José, Av. Valencia, Parc. 7 - Apdo. Correos: 46
46812 Aielo de Malferit, Valencia (España)
Tel.: 96 236 02 32 - E-mail: admi@envasessanzbelda.es – Web: www.envasessanzbelda.es